DRV8870 3.6-A Brushed DC Motor Driver (PWM Control)

1 Features

- H-Bridge Motor Driver
  - Drives One DC Motor, One Winding of a Stepper Motor, or Other Loads
- Wide 6.5-V to 45-V Operating Voltage
- 565-mΩ Typical $R_{DS(on)}$ (HS + LS)
- 3.6-A Peak Current Drive
- PWM Control Interface
- Integrated Current Regulation
- Low-Power Sleep Mode
- Small Package and Footprint
  - 8-Pin HSOP With PowerPAD™
  - 4.9 × 6.0 mm
- **Integrated Protection Features**
  - VM Undervoltage Lockout (UVLO)
  - Overcurrent Protection (OCP)
  - Thermal Shutdown (TSD)
  - Automatic Fault Recovery

2 Applications

- Printers
- Appliances
- Industrial Equipment
- Other Mechatronic Applications

3 Description

The DRV8870 is a brushed-DC motor driver for printers, appliances, industrial equipment, and other small machines. Two logic inputs control the H-bridge driver, which consists of four N-channel MOSFETs that can control motors bidirectionally with up to 3.6-A peak current. The inputs can be pulse-width modulated (PWM) to control motor speed, using a choice of current-decay modes. Setting both inputs low enters a low-power sleep mode.

The DRV8870 features integrated current regulation, based on the analog input VREF and the voltage on pin ISEN, which is proportional to motor current through an external sense resistor. The ability to limit current to a known level can significantly reduce the system power requirements and bulk capacitance needed to maintain stable voltage, especially for motor startup and stall conditions.

The device is fully protected from faults and short circuits, including under-voltage (UVLO), over-current (OCP), and over-temperature (TSD). When the fault condition is removed, the device automatically resumes normal operation.

Device Information (1)

PART NUMBER	PACKAGE	BODY SIZE (NOM)
DRV8870	HSOP (8)	4.90 mm × 6.00 mm

(1) For all available packages, see the orderable addendum at the end of the data sheet.

Simplified Schematic

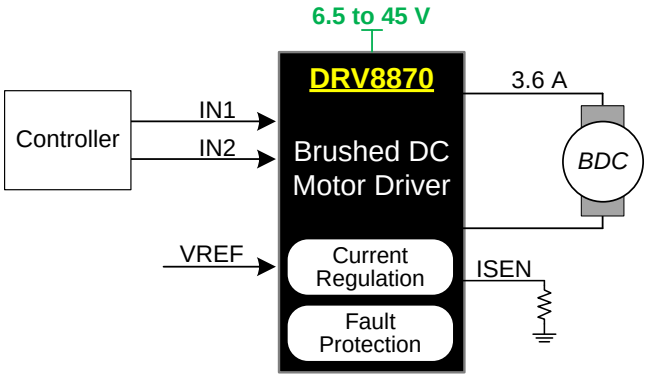

H-Bridge States

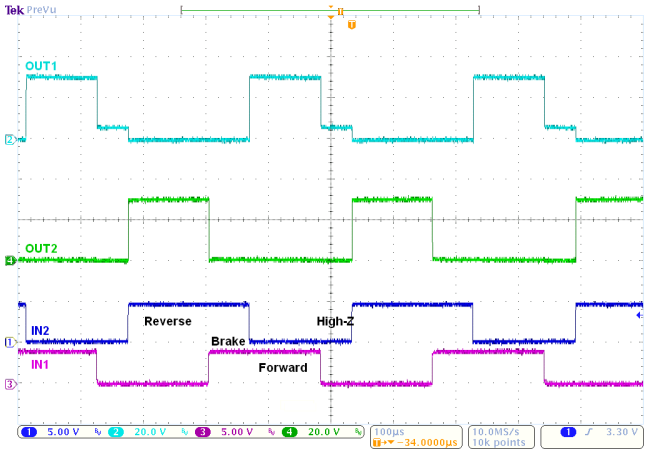

An IMPORTANT NOTICE at the end of this data sheet addresses availability, warranty, changes, use in safety-critical applications, intellectual property matters and other important disclaimers. PRODUCTION DATA.

Table of Contents

1 Features ... 1
2 Applications ... 1
3 Description ... 1
4 Revision History ... 2
5 Pin Configuration and Functions ... 3
6 Specifications ... 3
6.1 Absolute Maximum Ratings ... 3
6.2 ESD Ratings ... 4
6.3 Recommended Operating Conditions ... 4
6.4 Thermal Information ... 4
6.5 Electrical Characteristics ... 5
6.6 Typical Characteristics ... 6
7 Detailed Description ... 7
7.1 Overview ... 7
7.2 Functional Block Diagram ... 7
7.3 Feature Description ... 8
7.4 Device Functional Modes ... 10
8 Application and Implementation ... 11
8.1 Application Information ... 11
8.2 Typical Application ... 11
9 Power Supply Recommendations ... 14
9.1 Bulk Capacitance ... 14
10 Layout ... 15
10.1 Layout Guidelines ... 15
10.2 Layout Example ... 15
10.3 Thermal Considerations ... 15
10.4 Power Dissipation ... 15
11 Device and Documentation Support ... 17
11.1 Documentation Support ... 17
11.2 Community Resources ... 17
11.3 Trademarks ... 17
11.4 Electrostatic Discharge Caution ... 17
11.5 Glossary ... 17
12 Mechanical, Packaging, and Orderable Information ... 17

4 Revision History

NOTE: Page numbers for previous revisions may differ from page numbers in the current version.

Changes from Original (August 2015) to Revision A	Page
• Updated the f_{PWM} max value and added a note	4
• Removed the redundant T_A condition and added f_{PWM} = 24 kHz	5
• Added more information to clarify how the max RMS current varies for different applications	12

Copyright © 2015–2016, Texas Instruments Incorporated

5 Pin Configuration and Functions

DDA Package
8-Pin HSOP
Top View

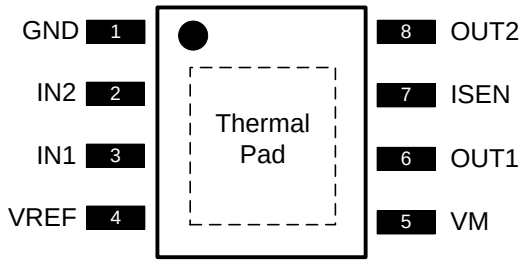

Pin Functions

PIN		TYPE	DESCRIPTION	
NAME	NO.			
GND	1	PWR	Logic ground	Connect to board ground
IN1	3	I	Logic inputs	Controls the H-bridge output. Has internal pulldowns. (See Table 1.)
IN2	2			
ISEN	7	PWR	High-current ground path	If using current regulation, connect ISEN to a resistor (low-value, high-power-rating) to ground. If not using current regulation, connect ISEN directly to ground.
OUT1	6	O	H-bridge output	Connect directly to the motor or other inductive load.
OUT2	8			
PAD	—	—	Thermal pad	Connect to board ground. For good thermal dissipation, use large ground planes on multiple layers, and multiple nearby vias connecting those planes.
VM	5	PWR	6.5-V to 45-V power supply	Connect a 0.1-µF bypass capacitor to ground, as well as sufficient bulk capacitance, rated for the VM voltage.
VREF	4	I	Analog input	Apply a voltage between 0.3 to 5 V. For information on current regulation, see the *Current Regulation* section.

6 Specifications

6.1 Absolute Maximum Ratings

over operating free-air temperature range (unless otherwise noted) (1)

	MIN	MAX	UNIT
Power supply voltage (VM)	–0.3	50	V
Power supply voltage ramp rate (VM)	0	2	V/µs
Logic input voltage (IN1, IN2)	–0.3	7	V
Reference input pin voltage (VREF)	–0.3	6	V
Continuous phase node pin voltage (OUT1, OUT2)	–0.7	VM + 0.7	V
Current sense input pin voltage (ISEN) (2)	–0.5	1	V
Operating junction temperature, T_J	–40	150	°C
Storage temperature, T_{stg}	–65	150	°C

(1) Stresses beyond those listed under *Absolute Maximum Ratings* may cause permanent damage to the device. These are stress ratings only, which do not imply functional operation of the device at these or any other conditions beyond those indicated under *Recommended Operating Conditions*. Exposure to absolute-maximum-rated conditions for extended periods may affect device reliability.
(2) Transients of ±1 V for less than 25 ns are acceptable

6.2 ESD Ratings

			VALUE	UNIT
$V_{(ESD)}$	Electrostatic discharge	Human-body model (HBM), per ANSI/ESDA/JEDEC JS-001 (1)	±6000	V
		Charged-device model (CDM), per JEDEC specification JESD22-C101 (2)	±750	

(1) JEDEC document JEP155 states that 500-V HBM allows safe manufacturing with a standard ESD control process.
(2) JEDEC document JEP157 states that 250-V CDM allows safe manufacturing with a standard ESD control process.

6.3 Recommended Operating Conditions

over operating free-air temperature range (unless otherwise noted)

		MIN	NOM	MAX	UNIT
VM	Power supply voltage	6.5		45	V
VREF	VREF input voltage	0.3 (1)		5	V
V_I	Logic input voltage range (IN1, IN2)	0		5.5	V
f_{PWM}	Logic input PWM frequency (IN1, IN2)	0		200 (2)	kHz
I_{peak}	Peak output current (3)	0		3.6	A
T_A	Operating ambient temperature (3)	–40		125	°C

(1) Operational at VREF = 0 to 0.3 V, but accuracy is degraded
(2) The voltages applied to the inputs should have at least 800 ns of pulse width to ensure detection. Typical devices require at least 400 ns. If the PWM frequency is 200 kHz, the usable duty cycle range is 16% to 84%.
(3) Power dissipation and thermal limits must be observed

6.4 Thermal Information

THERMAL METRIC (1)		DRV8870 DDA (HSOP) 8 PINS	UNIT
$R_{\theta JA}$	Junction-to-ambient thermal resistance	41.1	°C/W
$R_{\theta JC(top)}$	Junction-to-case (top) thermal resistance	53.1	°C/W
$R_{\theta JB}$	Junction-to-board thermal resistance	23.1	°C/W
ψ_{JT}	Junction-to-top characterization parameter	8.2	°C/W
ψ_{JB}	Junction-to-board characterization parameter	23	°C/W
$R_{\theta JC(bot)}$	Junction-to-case (bottom) thermal resistance	2.7	°C/W

(1) For more information about traditional and new thermal metrics, see the *Semiconductor and IC Package Thermal Metrics* application report, SPRA953.

Copyright © 2015–2016, Texas Instruments Incorporated

6.5 Electrical Characteristics

T_A = 25°C, over recommended operating conditions (unless otherwise noted)

PARAMETER		TEST CONDITIONS	MIN	TYP	MAX	UNIT
POWER SUPPLY (VM)						
VM	VM operating voltage		6.5		45	V
I_{VM}	VM operating supply current	VM = 12 V		3	10	mA
$I_{VMSLEEP}$	VM sleep current	VM = 12 V			10	µA
t_{ON} (1)	Turn-on time	VM > V_{UVLO} with IN1 or IN2 high		40	50	µs
LOGIC-LEVEL INPUTS (IN1, IN2)						
V_{IL}	Input logic low voltage				0.5	V
V_{IH}	Input logic high voltage		1.5			V
V_{HYS}	Input logic hysteresis			0.5		V
I_{IL}	Input logic low current	V_{IN} = 0 V	-1		1	µA
I_{IH}	Input logic high current	V_{IN} = 3.3 V		33	100	µA
R_{PD}	Pulldown resistance	to GND		100		kΩ
t_{PD}	Propagation delay	INx to OUTx change (see Figure 6)		0.7	1	µs
t_{sleep}	Time to sleep	Inputs low to sleep		1	1.5	ms
MOTOR DRIVER OUTPUTS (OUT1, OUT2)						
$R_{DS(ON)}$	High-side FET on resistance	VM = 24 V, I = 1 A, f_{PWM} = 25 kHz		307	360	mΩ
$R_{DS(ON)}$	Low-side FET on resistance	VM = 24 V, I = 1 A, f_{PWM} = 25 kHz		258	320	mΩ
t_{DEAD}	Output dead time			220		ns
V_d	Body diode forward voltage	I_{OUT} = 1 A		0.8	1	V
CURRENT REGULATION						
A_V	ISEN gain	VREF = 2.5 V	9.4	10	10.4	V/V
t_{OFF}	PWM off-time			25		µs
t_{BLANK}	PWM blanking time			2		µs
PROTECTION CIRCUITS						
V_{UVLO}	VM undervoltage lockout	VM falls until UVLO triggers		6.1	6.4	V
		VM rises until operation recovers		6.3	6.5	
$V_{UV,HYS}$	VM undervoltage hysteresis	Rising to falling threshold	100	180		mV
I_{OCP}	Overcurrent protection trip level		3.7	4.5	6.4	A
t_{OCP}	Overcurrent deglitch time			1.5		µs
t_{RETRY}	Overcurrent retry time			3		ms
T_{SD}	Thermal shutdown temperature		150	175		°C
T_{HYS}	Thermal shutdown hysteresis			40		°C

(1) t_{ON} applies when the device initially powers up, and when it exits sleep mode.

Copyright © 2015–2016, Texas Instruments Incorporated

6.6 Typical Characteristics

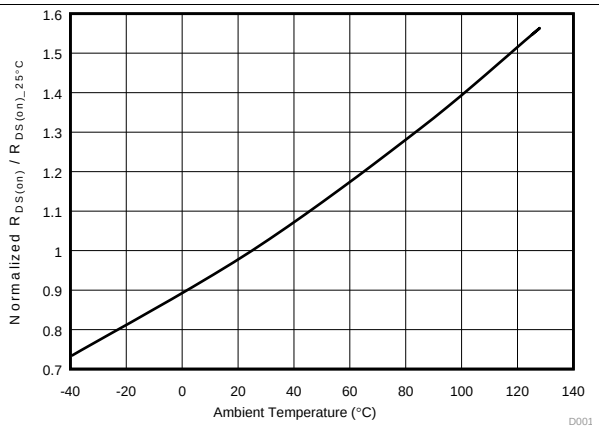

Figure 1. $R_{DS(on)}$ vs Temperature

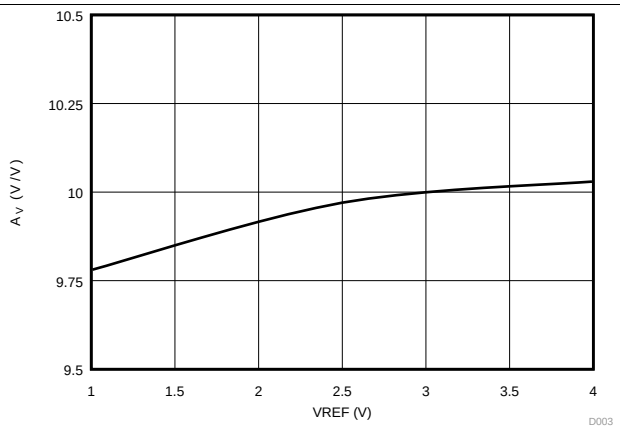

Figure 2. A_V vs VREF

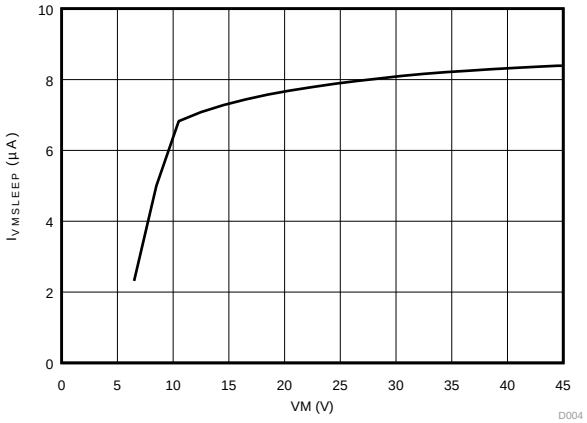

Figure 3. $I_{VMSLEEP}$ vs VM at 25°C

Copyright © 2015–2016, Texas Instruments Incorporated

7 Detailed Description

7.1 Overview

The DRV8870 is an optimized 8-pin device for driving brushed DC motors with 6.5 to 45 V and up to 3.6-A peak current. The integrated current regulation restricts motor current to a predefined maximum. Two logic inputs control the H-bridge driver, which consists of four N-channel MOSFETs that have a typical $R_{ds(on)}$ of 565 mΩ (including one high-side and one low-side FET). A single power input, VM, serves as both device power and the motor winding bias voltage. The integrated charge pump of the device boosts VM internally and fully enhances the high-side FETs. Motor speed can be controlled with pulse-width modulation, at frequencies between 0 to 100 kHz. The device has an integrated sleep mode that is entered by bringing both inputs low. An assortment of protection features prevent the device from being damaged if a system fault occurs.

7.2 Functional Block Diagram

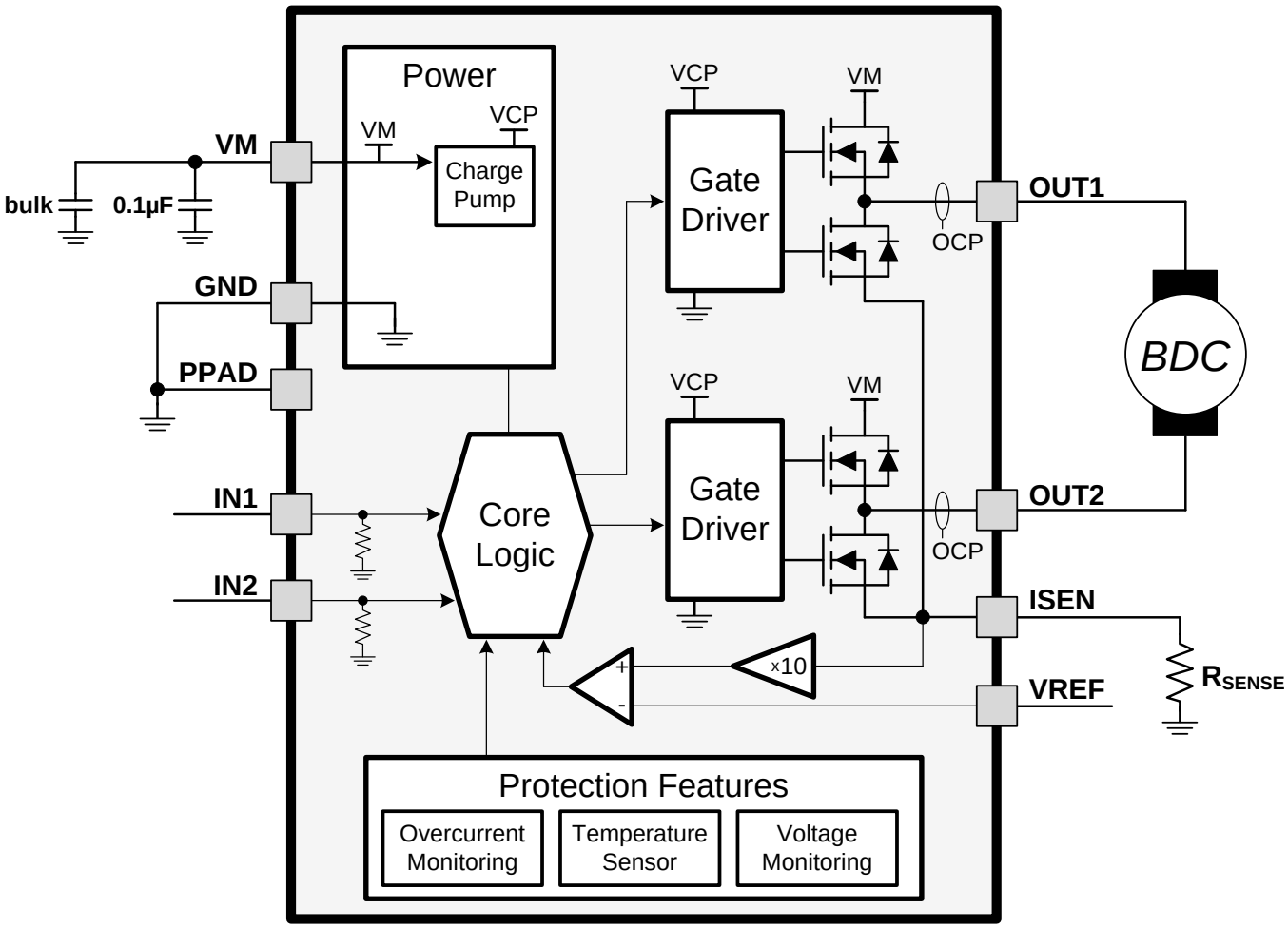

7.3 Feature Description

7.3.1 Bridge Control

The DRV8870 output consists of four N-channel MOSFETs that are designed to drive high current. They are controlled by the two logic inputs IN1 and IN2, according to Table 1.

Table 1. H-Bridge Control

IN1	IN2	OUT1	OUT2	DESCRIPTION
0	0	High-Z	High-Z	Coast; H-bridge disabled to High-Z (sleep entered after 1 ms)
0	1	L	H	Reverse (Current OUT2 → OUT1)
1	0	H	L	Forward (Current OUT1 → OUT2)
1	1	L	L	Brake; low-side slow decay

The inputs can be set to static voltages for 100% duty cycle drive, or they can be pulse-width modulated (PWM) for variable motor speed. When using PWM, it typically works best to switch between driving and braking. For example, to drive a motor forward with 50% of its max RPM, IN1 = 1 and IN2 = 0 during the driving period, and IN1 = 1 and IN2 = 1 during the other period. Alternatively, the coast mode (IN1 = 0, IN2 = 0) for *fast current decay* is also available. The input pins can be powered before VM is applied.

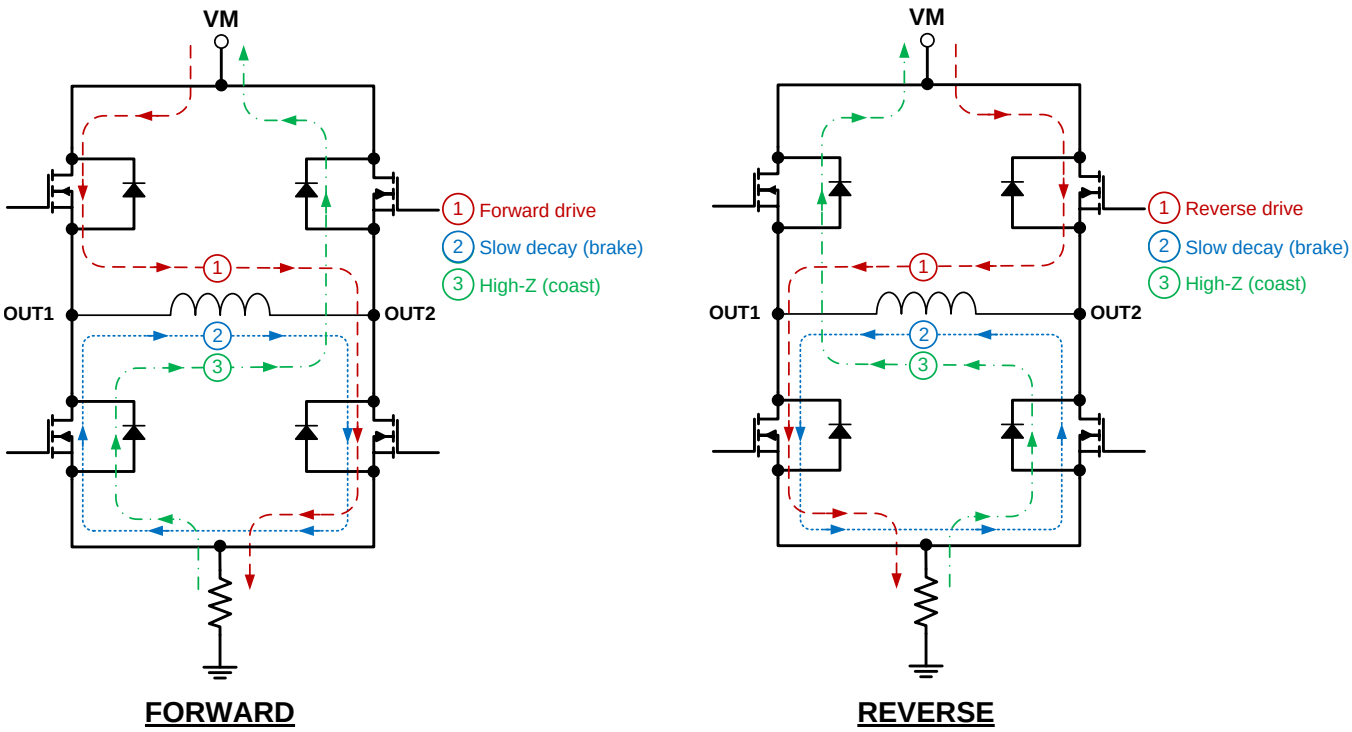

Figure 4. H-Bridge Current Paths

7.3.2 Sleep Mode

When IN1 and IN2 are both low for time t_{SLEEP} (typically 1 ms), the DRV8870 enters a low-power sleep mode, where the outputs remain High-Z and the device uses $I_{VMSLEEP}$ (microamps) of current. If the device is powered up while both inputs are low, sleep mode is immediately entered. After IN1 or IN2 are high for at least 5 µs, the device will be operational 50 µs (t_{ON}) later.

7.3.3 Current Regulation

The DRV8870 limits the output current based on the analog input VREF and the resistance of an external sense resistor on pin ISEN, according to this equation:

Copyright © 2015–2016, Texas Instruments Incorporated

$$I_{TRIP}\ (A) = \frac{VREF\ (V)}{A_v \times R_{ISEN}\ (\Omega)} = \frac{VREF\ (V)}{10 \times R_{ISEN}\ (\Omega)} \quad (1)$$

For example, if VREF = 3.3 V and a R_{ISEN} = 0.15 Ω, the DRV8870 will limit motor current to 2.2 A no matter how much load torque is applied. For guidelines on selecting a sense resistor, see *Sense Resistor*.

When I_{TRIP} has been reached, the device enforces slow current decay by enabling both low-side FETs, and it does this for time t_{OFF} (typically 25 µs).

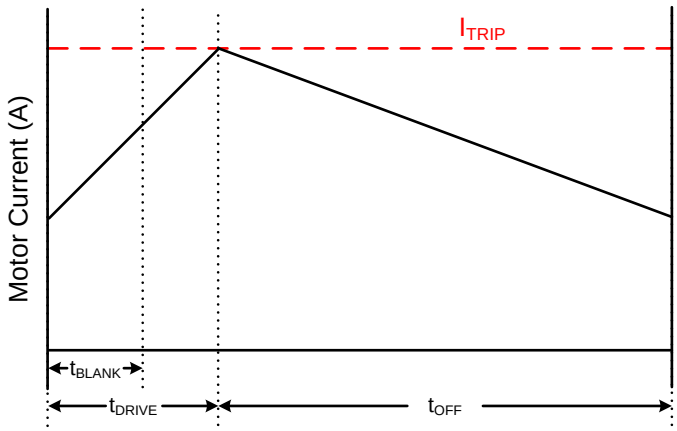

Figure 5. Current Regulation Time Periods

After t_{OFF} has elapsed, the output is re-enabled according to the two inputs INx. The drive time (t_{DRIVE}) until reaching another I_{TRIP} event heavily depends on the VM voltage, the motor's back-EMF, and the motor's inductance.

7.3.4 Dead Time

When an output changes from driving high to driving low, or driving low to driving high, dead time is automatically inserted to prevent shoot-through. t_{DEAD} is the time in the middle when the output is High-Z. If the output pin is measured during t_{DEAD}, the voltage will depend on the direction of current. If current is leaving the pin, the voltage will be a diode drop below ground. If current is entering the pin, the voltage will be a diode drop above VM. This diode is the body diode of the high-side or low-side FET.

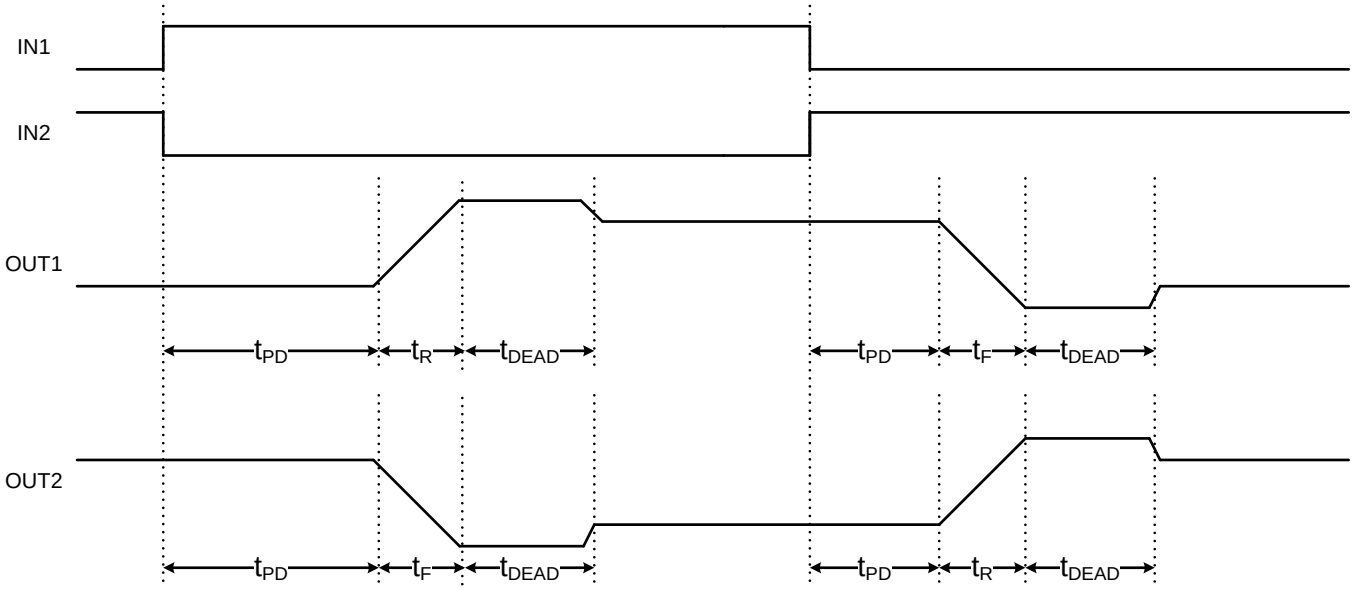

Figure 6. Propagation Delay Time

7.3.5 Protection Circuits

The DRV8870 is fully protected against VM undervoltage, overcurrent, and overtemperature events.

7.3.5.1 VM Undervoltage Lockout (UVLO)

If at any time the voltage on the VM pin falls below the undervoltage lockout threshold voltage, all FETs in the H-bridge will be disabled. Operation will resume when VM rises above the UVLO threshold.

7.3.5.2 Overcurrent Protection (OCP)

If the output current exceeds the OCP threshold I_{OCP} for longer than t_{OCP}, all FETs in the H-bridge are disabled for a duration of t_{RETRY}. After that, the H-bridge will be re-enabled according to the state of the INx pins. If the overcurrent fault is still present, the cycle repeats; otherwise normal device operation resumes.

7.3.5.3 Thermal Shutdown (TSD)

If the die temperature exceeds safe limits, all FETs in the H-bridge will be disabled. After the die temperature has fallen to a safe level, operation automatically resumes.

Table 2. Protection Functionality

FAULT	CONDITION	H-BRIDGE BECOMES	RECOVERY
VM undervoltage lockout (UVLO)	$VM < V_{UVLO}$	Disabled	$VM > V_{UVLO}$
Overcurrent (OCP)	$I_{OUT} > I_{OCP}$	Disabled	t_{RETRY}
Thermal Shutdown (TSD)	$T_J > 150°C$	Disabled	$T_J < T_{SD} – T_{HYS}$

7.4 Device Functional Modes

The DRV8870 can be used in multiple ways to drive a brushed DC motor.

7.4.1 PWM With Current Regulation

This scheme uses all of the device's capabilities. I_{TRIP} is set above the normal operating current, and high enough to achieve an adequate spin-up time, but low enough to constrain current to a desired level. Motor speed is controlled by the duty cycle of one of the inputs, while the other input is static. Brake/slow decay is typically used during the off-time.

7.4.2 PWM Without Current Regulation

If current regulation is not needed, pin ISEN should be directly connected to the PCB ground plane. VREF must still be 0.3 to 5 V, and larger voltages provide greater noise margin. This mode provides the highest possible peak current: up to 3.6 A for a few hundred milliseconds (depending on PCB characteristics and the ambient temperature). If current exceeds 3.6 A, the device might reach overcurrent protection (OCP) or overtemperature shutdown (TSD). If that happens, the device disables and protects itself for about 3 ms (t_{RETRY}) and then resumes normal operation.

7.4.3 Static Inputs With Current Regulation

IN1 and IN2 can be set high and low for 100% duty cycle drive, and I_{TRIP} can be used to control the motor's current, speed, and torque capability.

7.4.4 VM Control

In some systems it is desirable to vary VM as a means of changing motor speed. See *Motor Voltage* for more information.

Copyright © 2015–2016, Texas Instruments Incorporated

8 Application and Implementation

NOTE

Information in the following applications sections is not part of the TI component specification, and TI does not warrant its accuracy or completeness. TI's customers are responsible for determining suitability of components for their purposes. Customers should validate and test their design implementation to confirm system functionality.

8.1 Application Information

The DRV8870 is typically used to drive one brushed DC motor.

8.2 Typical Application

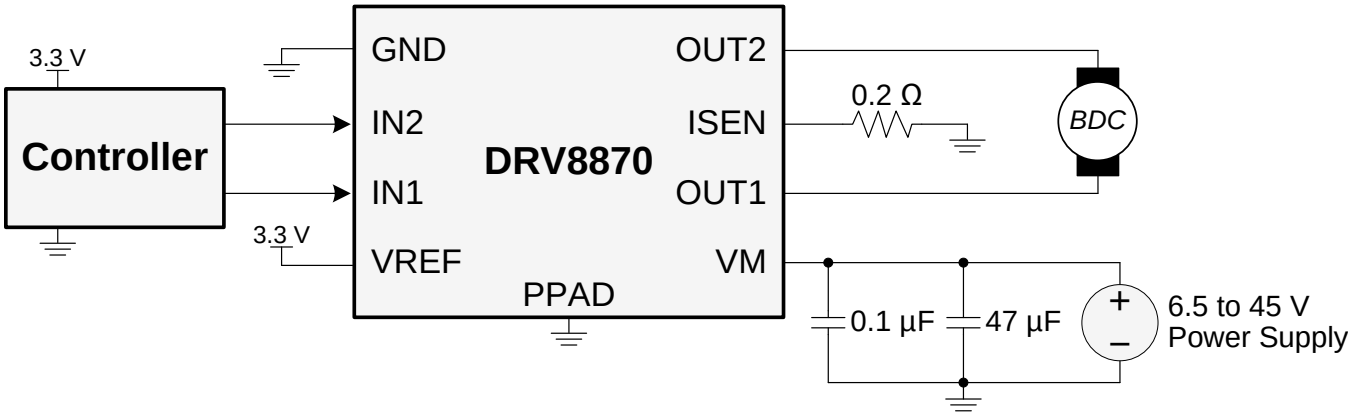

Figure 7. Typical Connections

8.2.1 Design Requirements

Table 3 lists the design parameters.

Table 3. Design Parameters

DESIGN PARAMETER	REFERENCE	EXAMPLE VALUE
Motor voltage	V_M	24 V
Motor RMS current	I_{RMS}	0.8 A
Motor startup current	I_{START}	2 A
Motor current trip point	I_{TRIP}	2.2 A
VREF voltage	VREF	3.3 V
Sense resistance	R_{ISEN}	0.15 Ω
PWM frequency	f_{PWM}	5 kHz

8.2.2 Detailed Design Procedure

8.2.2.1 Motor Voltage

The motor voltage to use will depend on the ratings of the motor selected and the desired RPM. A higher voltage spins a brushed DC motor faster with the same PWM duty cycle applied to the power FETs. A higher voltage also increases the rate of current change through the inductive motor windings.

8.2.2.2 Drive Current

The current path is through the high-side sourcing DMOS power driver, motor winding, and low-side sinking DMOS power driver. Power dissipation losses in one source and sink DMOS power driver are shown in the following equation.

$$P_D = I^2 \left(R_{DS(on)Source} + R_{DS(on)Sink}\right) \quad (2)$$

The DRV8870 has been measured to be capable of 2-A RMS current at 25°C on standard FR-4 PCBs. The max RMS current varies based on the PCB design, ambient temperature, and PWM frequency. Typically, switching the inputs at 200 kHz compared to 20 kHz causes 20% more power loss in heat.

8.2.2.3 Sense Resistor

For optimal performance, it is important for the sense resistor to be:

- Surface-mount
- Low inductance
- Rated for high enough power
- Placed closely to the motor driver

The power dissipated by the sense resistor equals $I_{RMS}^2 \times R$. For example, if peak motor current is 3 A, RMS motor current is 1.5 A, and a 0.2-Ω sense resistor is used, the resistor will dissipate 1.5 A^2 × 0.2 Ω = 0.45 W. The power quickly increases with higher current levels.

Resistors typically have a rated power within some ambient temperature range, along with a derated power curve for high ambient temperatures. When a PCB is shared with other components generating heat, the system designer should add margin. It is always best to measure the actual sense resistor temperature in a final system.

Because power resistors are larger and more expensive than standard resistors, it is common practice to use multiple standard resistors in parallel, between the sense node and ground. This distributes the current and heat dissipation.

8.2.3 Application Curves

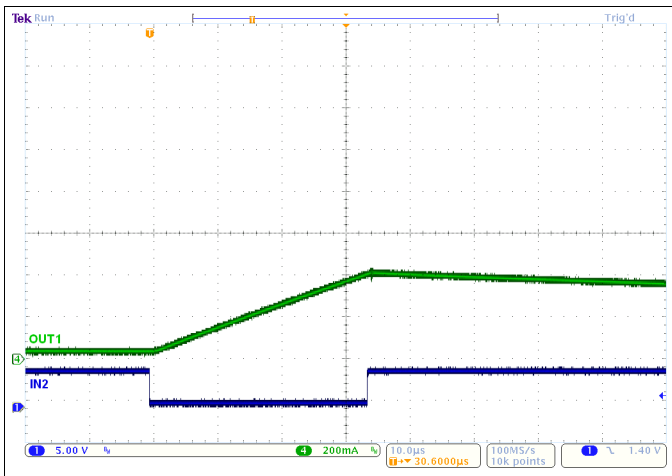

Figure 8. Current Ramp With a 2-Ω, 1 mH, RL Load and VM = 12 V

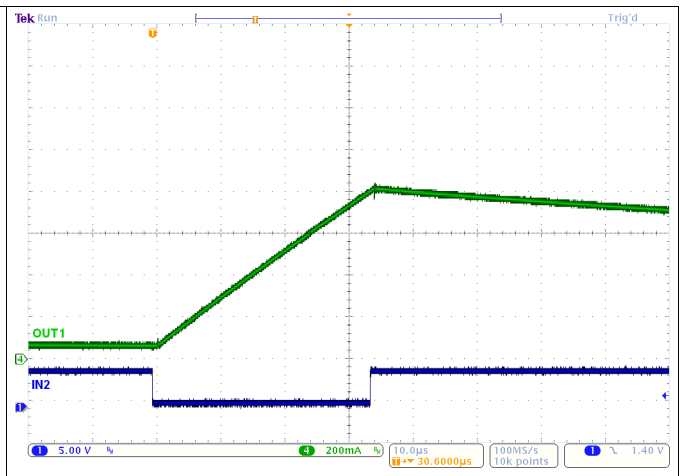

Figure 9. Current Ramp With a 2-Ω, 1 mH, RL Load and VM = 24 V

Copyright © 2015–2016, Texas Instruments Incorporated

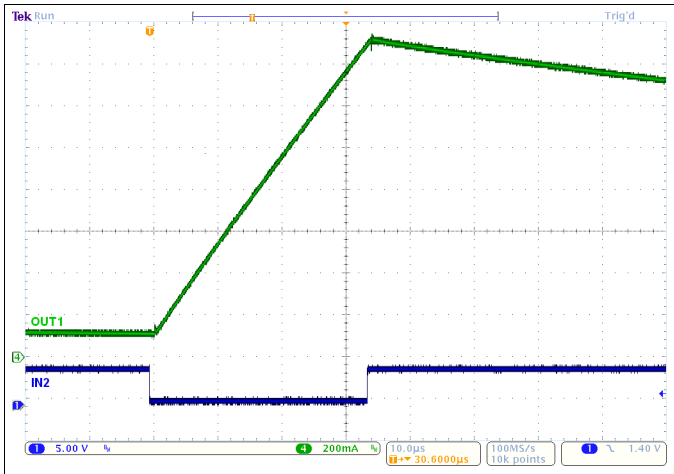

Figure 10. Current Ramp With a 2-Ω, 1 mH, RL Load and VM = 45 V

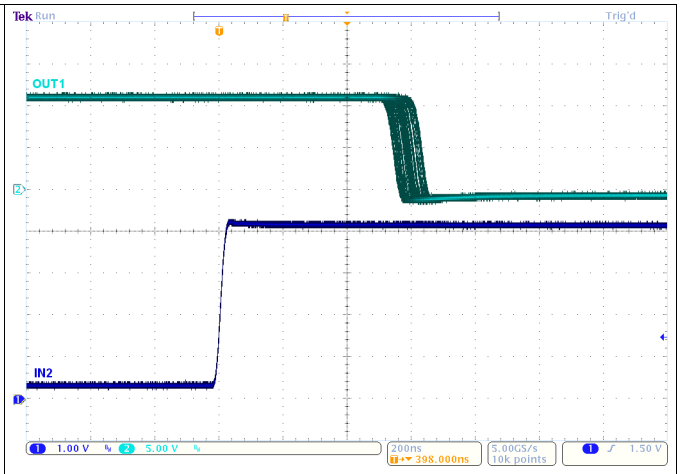

Figure 11. t_{PD}

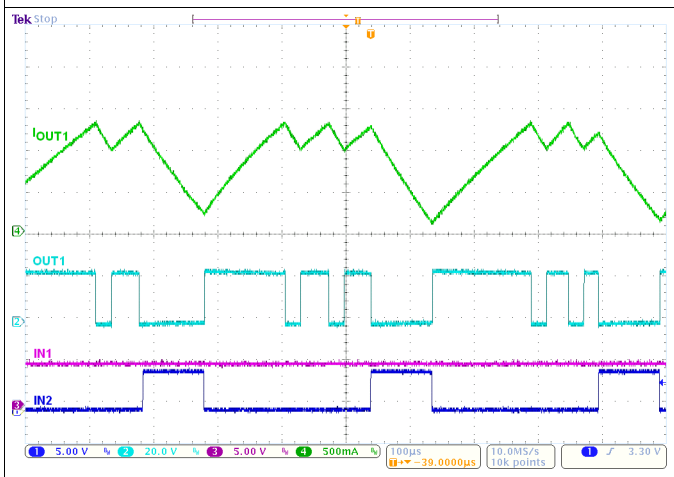

Figure 12. Current Regulation With VREF = 2 V and 150 mΩ

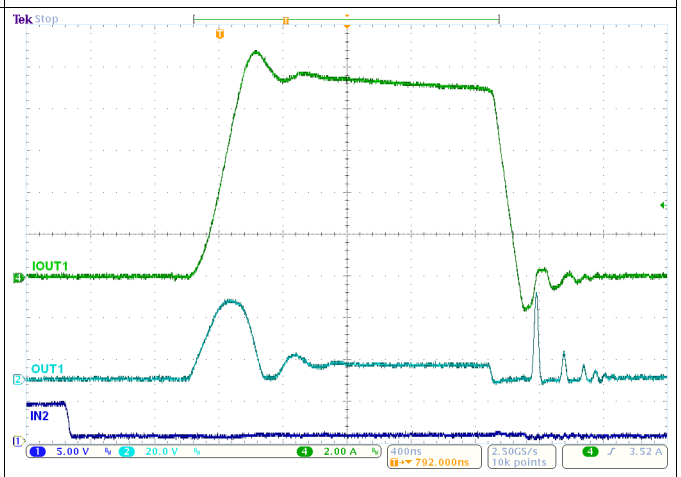

Figure 13. OCP With 45 V and the Outputs Shorted Together

9 Power Supply Recommendations

9.1 Bulk Capacitance

Having appropriate local bulk capacitance is an important factor in motor drive system design. It is generally beneficial to have more bulk capacitance, while the disadvantages are increased cost and physical size.

The amount of local capacitance needed depends on a variety of factors, including:

- The highest current required by the motor system
- The power supply's capacitance and ability to source current
- The amount of parasitic inductance between the power supply and motor system
- The acceptable voltage ripple
- The type of motor used (brushed DC, brushless DC, stepper)
- The motor braking method

The inductance between the power supply and motor drive system will limit the rate current can change from the power supply. If the local bulk capacitance is too small, the system will respond to excessive current demands or dumps from the motor with a change in voltage. When adequate bulk capacitance is used, the motor voltage remains stable and high current can be quickly supplied.

The data sheet generally provides a recommended value, but system-level testing is required to determine the appropriate sized bulk capacitor.

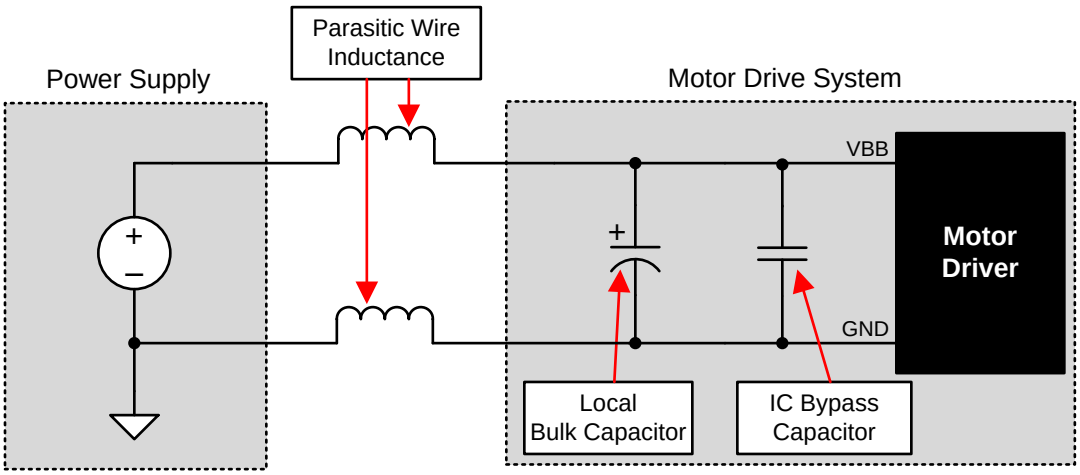

Figure 14. Example Setup of Motor Drive System With External Power Supply

The voltage rating for bulk capacitors should be higher than the operating voltage, to provide margin for cases when the motor transfers energy to the supply.

Copyright © 2015–2016, Texas Instruments Incorporated

10 Layout

10.1 Layout Guidelines

The bulk capacitor should be placed to minimize the distance of the high-current path through the motor driver device. The connecting metal trace widths should be as wide as possible, and numerous vias should be used when connecting PCB layers. These practices minimize inductance and allow the bulk capacitor to deliver high current.

Small-value capacitors should be ceramic, and placed closely to device pins.

The high-current device outputs should use wide metal traces.

The device thermal pad should be soldered to the PCB top-layer ground plane. Multiple vias should be used to connect to a large bottom-layer ground plane. The use of large metal planes and multiple vias help dissipate the $I^2 \times R_{DS(on)}$ heat that is generated in the device.

10.2 Layout Example

Recommended layout and component placement is shown in the following diagram.

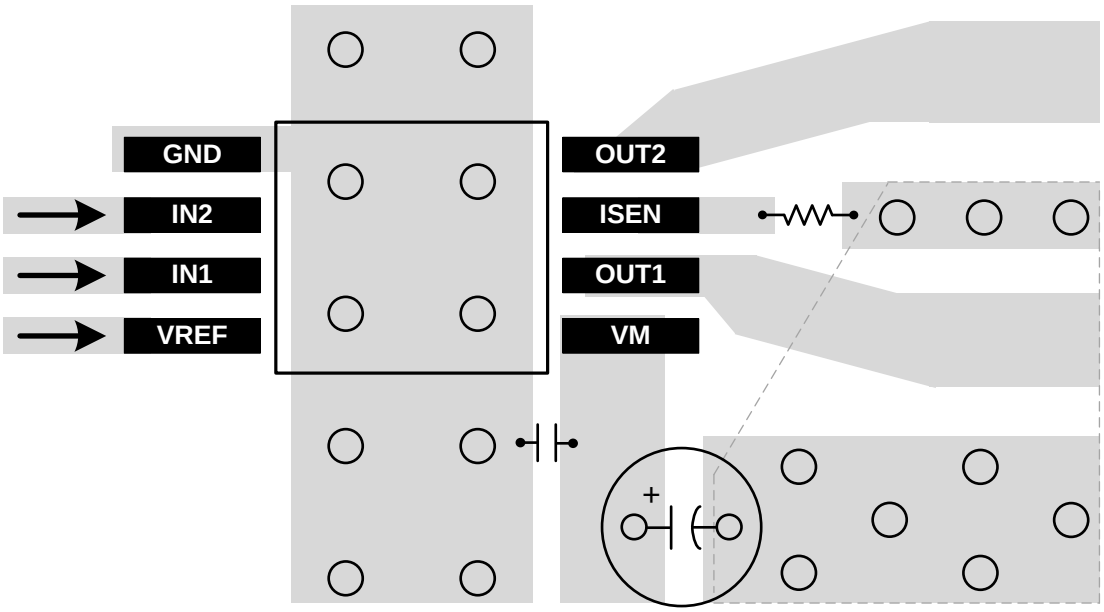

Figure 15. Layout Recommendation

10.3 Thermal Considerations

The DRV8870 device has thermal shutdown (TSD) as described in the *Thermal Shutdown (TSD)* section. If the die temperature exceeds approximately 175°C, the device is disabled until the temperature drops below the temperature hysteresis level.

Any tendency of the device to enter TSD is an indication of either excessive power dissipation, insufficient heatsinking, or too high of an ambient temperature.

10.4 Power Dissipation

Power dissipation in the DRV8870 device is dominated by the power dissipated in the output FET resistance, $R_{DS(on)}$. Use the equation in the *Drive Current* section to calculate the estimated average power dissipation when driving a load.

Note that at startup, the current is much higher than normal running current; this peak current and its duration must be also be considered.

Power Dissipation (continued)

The maximum amount of power that can be dissipated in the device is dependent on ambient temperature and heatsinking.

NOTE

$R_{DS(on)}$ increases with temperature, so as the device heats, the power dissipation increases. This fact must be taken into consideration when sizing the heatsink.

The power dissipation of the DRV8870 is a function of RMS motor current and the FET resistance ($R_{DS(ON)}$) of each output.

$$\text{Power} \approx I_{RMS}^2 \times \left(\text{High-side } R_{DS(ON)} + \text{ Low-side } R_{DS(ON)}\right) \tag{3}$$

For this example, the ambient temperature is 58°C, and the junction temperature reaches 80°C. At 58°C, the sum of $R_{DS(ON)}$ is about 0.72 Ω. With an example motor current of 0.8 A, the dissipated power in the form of heat will be 0.8 A^2 × 0.72 Ω = 0.46 W.

The temperature that the DRV8870 reaches will depend on the thermal resistance to the air and PCB. It is important to solder the device PowerPAD to the PCB ground plane, with vias to the top and bottom board layers, in order dissipate heat into the PCB and reduce the device temperature. In the example used here, the DRV8870 had an effective thermal resistance $R_{\theta JA}$ of 48°C/W, and:

$$T_J = T_A + (P_D \times R_{\theta JA}) = 58°C + (0.46\ W \times 48°C/W) = 80°C \tag{4}$$

10.4.1 Heatsinking

The PowerPAD package uses an exposed pad to remove heat from the device. For proper operation, this pad must be thermally connected to copper on the PCB to dissipate heat. On a multi-layer PCB with a ground plane, this connection can be accomplished by adding a number of vias to connect the thermal pad to the ground plane.

On PCBs without internal planes, a copper area can be added on either side of the PCB to dissipate heat. If the copper area is on the opposite side of the PCB from the device, thermal vias are used to transfer the heat between top and bottom layers.

For details about how to design the PCB, refer to the TI application report, *PowerPAD™ Thermally Enhanced Package* (SLMA002), and the TI application brief, *PowerPAD Made Easy™* (SLMA004), available at www.ti.com. In general, the more copper area that can be provided, the more power can be dissipated.

Copyright © 2015–2016, Texas Instruments Incorporated

11 Device and Documentation Support

11.1 Documentation Support

11.1.1 Related Documentation

- *PowerPAD™ Thermally Enhanced Package* application report, SLMA002
- *PowerPAD™ Made Easy* application brief, SLMA004
- *Current Recirculation and Decay Modes* application report, SLVA321
- *Calculating Motor Driver Power Dissipation* application report, SLVA504
- *Understanding Motor Driver Current Ratings* application report, SLVA505

11.2 Community Resources

The following links connect to TI community resources. Linked contents are provided "AS IS" by the respective contributors. They do not constitute TI specifications and do not necessarily reflect TI's views; see TI's Terms of Use.

TI E2E™ Online Community ***TI's Engineer-to-Engineer (E2E) Community.*** Created to foster collaboration among engineers. At e2e.ti.com, you can ask questions, share knowledge, explore ideas and help solve problems with fellow engineers.

Design Support ***TI's Design Support*** Quickly find helpful E2E forums along with design support tools and contact information for technical support.

11.3 Trademarks

PowerPAD, E2E are trademarks of Texas Instruments.
All other trademarks are the property of their respective owners.

11.4 Electrostatic Discharge Caution

These devices have limited built-in ESD protection. The leads should be shorted together or the device placed in conductive foam during storage or handling to prevent electrostatic damage to the MOS gates.

11.5 Glossary

SLYZ022 — *TI Glossary*.

This glossary lists and explains terms, acronyms, and definitions.

12 Mechanical, Packaging, and Orderable Information

The following pages include mechanical, packaging, and orderable information. This information is the most current data available for the designated devices. This data is subject to change without notice and revision of this document. For browser-based versions of this data sheet, refer to the left-hand navigation.

PACKAGING INFORMATION

Orderable Device	Status (1)	Package Type	Package Drawing	Pins	Package Qty	Eco Plan (2)	Lead/Ball Finish (6)	MSL Peak Temp (3)	Op Temp (°C)	Device Marking (4/5)	Samples
DRV8870DDA	ACTIVE	SO PowerPAD	DDA	8	75	Green (RoHS & no Sb/Br)	CU NIPDAUAG	Level-2-260C-1 YEAR	-40 to 125	8870	Samples
DRV8870DDAR	ACTIVE	SO PowerPAD	DDA	8	2500	Green (RoHS & no Sb/Br)	CU NIPDAUAG	Level-2-260C-1 YEAR	-40 to 125	8870	Samples

(1) The marketing status values are defined as follows:
ACTIVE: Product device recommended for new designs.
LIFEBUY: TI has announced that the device will be discontinued, and a lifetime-buy period is in effect.
NRND: Not recommended for new designs. Device is in production to support existing customers, but TI does not recommend using this part in a new design.
PREVIEW: Device has been announced but is not in production. Samples may or may not be available.
OBSOLETE: TI has discontinued the production of the device.

(2) Eco Plan - The planned eco-friendly classification: Pb-Free (RoHS), Pb-Free (RoHS Exempt), or Green (RoHS & no Sb/Br) - please check http://www.ti.com/productcontent for the latest availability information and additional product content details.
TBD: The Pb-Free/Green conversion plan has not been defined.
Pb-Free (RoHS): TI's terms "Lead-Free" or "Pb-Free" mean semiconductor products that are compatible with the current RoHS requirements for all 6 substances, including the requirement that lead not exceed 0.1% by weight in homogeneous materials. Where designed to be soldered at high temperatures, TI Pb-Free products are suitable for use in specified lead-free processes.
Pb-Free (RoHS Exempt): This component has a RoHS exemption for either 1) lead-based flip-chip solder bumps used between the die and package, or 2) lead-based die adhesive used between the die and leadframe. The component is otherwise considered Pb-Free (RoHS compatible) as defined above.
Green (RoHS & no Sb/Br): TI defines "Green" to mean Pb-Free (RoHS compatible), and free of Bromine (Br) and Antimony (Sb) based flame retardants (Br or Sb do not exceed 0.1% by weight in homogeneous material)

(3) MSL, Peak Temp. - The Moisture Sensitivity Level rating according to the JEDEC industry standard classifications, and peak solder temperature.

(4) There may be additional marking, which relates to the logo, the lot trace code information, or the environmental category on the device.

(5) Multiple Device Markings will be inside parentheses. Only one Device Marking contained in parentheses and separated by a "~" will appear on a device. If a line is indented then it is a continuation of the previous line and the two combined represent the entire Device Marking for that device.

(6) Lead/Ball Finish - Orderable Devices may have multiple material finish options. Finish options are separated by a vertical ruled line. Lead/Ball Finish values may wrap to two lines if the finish value exceeds the maximum column width.

Important Information and Disclaimer: The information provided on this page represents TI's knowledge and belief as of the date that it is provided. TI bases its knowledge and belief on information provided by third parties, and makes no representation or warranty as to the accuracy of such information. Efforts are underway to better integrate information from third parties. TI has taken and continues to take reasonable steps to provide representative and accurate information but may not have conducted destructive testing or chemical analysis on incoming materials and chemicals. TI and TI suppliers consider certain information to be proprietary, and thus CAS numbers and other limited information may not be available for release.

In no event shall TI's liability arising out of such information exceed the total purchase price of the TI part(s) at issue in this document sold by TI to Customer on an annual basis.

TAPE AND REEL INFORMATION

REEL DIMENSIONS

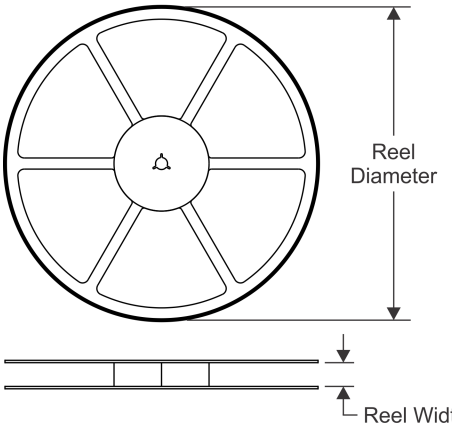

TAPE DIMENSIONS

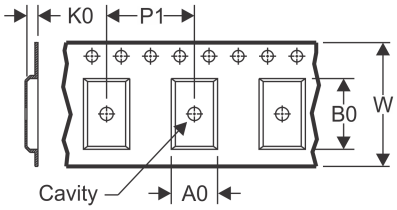

A0	Dimension designed to accommodate the component width
B0	Dimension designed to accommodate the component length
K0	Dimension designed to accommodate the component thickness
W	Overall width of the carrier tape
P1	Pitch between successive cavity centers

QUADRANT ASSIGNMENTS FOR PIN 1 ORIENTATION IN TAPE

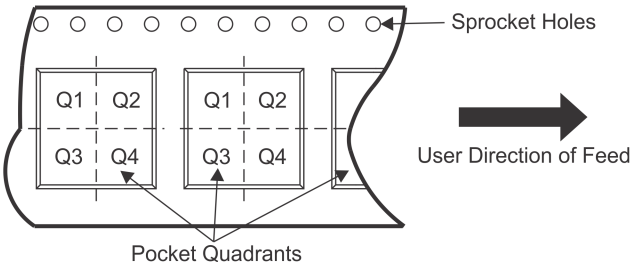

*All dimensions are nominal

Device	Package Type	Package Drawing	Pins	SPQ	Reel Diameter (mm)	Reel Width W1 (mm)	A0 (mm)	B0 (mm)	K0 (mm)	P1 (mm)	W (mm)	Pin1 Quadrant
DRV8870DDAR	SO Power PAD	DDA	8	2500	330.0	12.8	6.4	5.2	2.1	8.0	12.0	Q1

TAPE AND REEL BOX DIMENSIONS

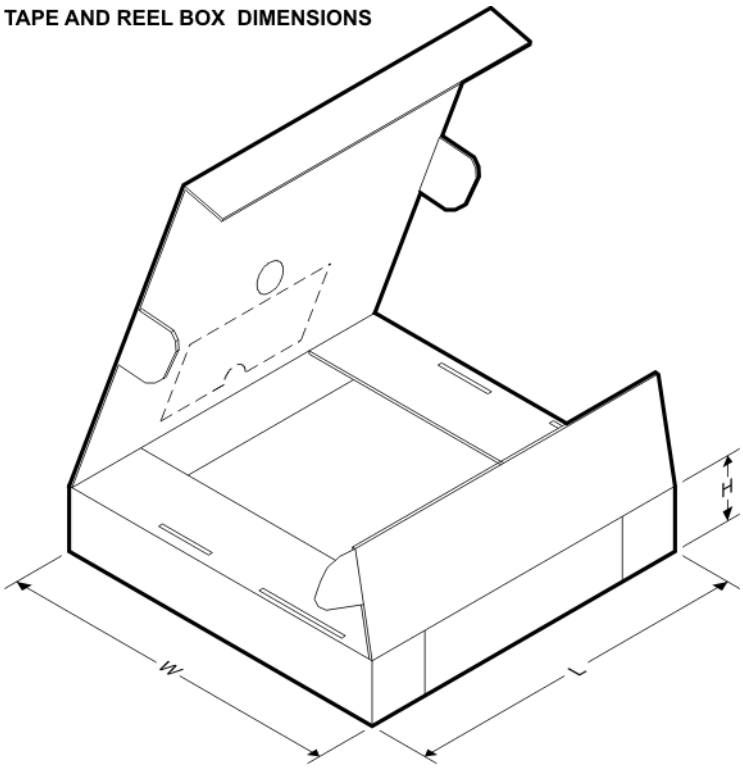

*All dimensions are nominal

Device	Package Type	Package Drawing	Pins	SPQ	Length (mm)	Width (mm)	Height (mm)
DRV8870DDAR	SO PowerPAD	DDA	8	2500	366.0	364.0	50.0

DDA (R-PDSO-G8) PowerPAD™ PLASTIC SMALL-OUTLINE

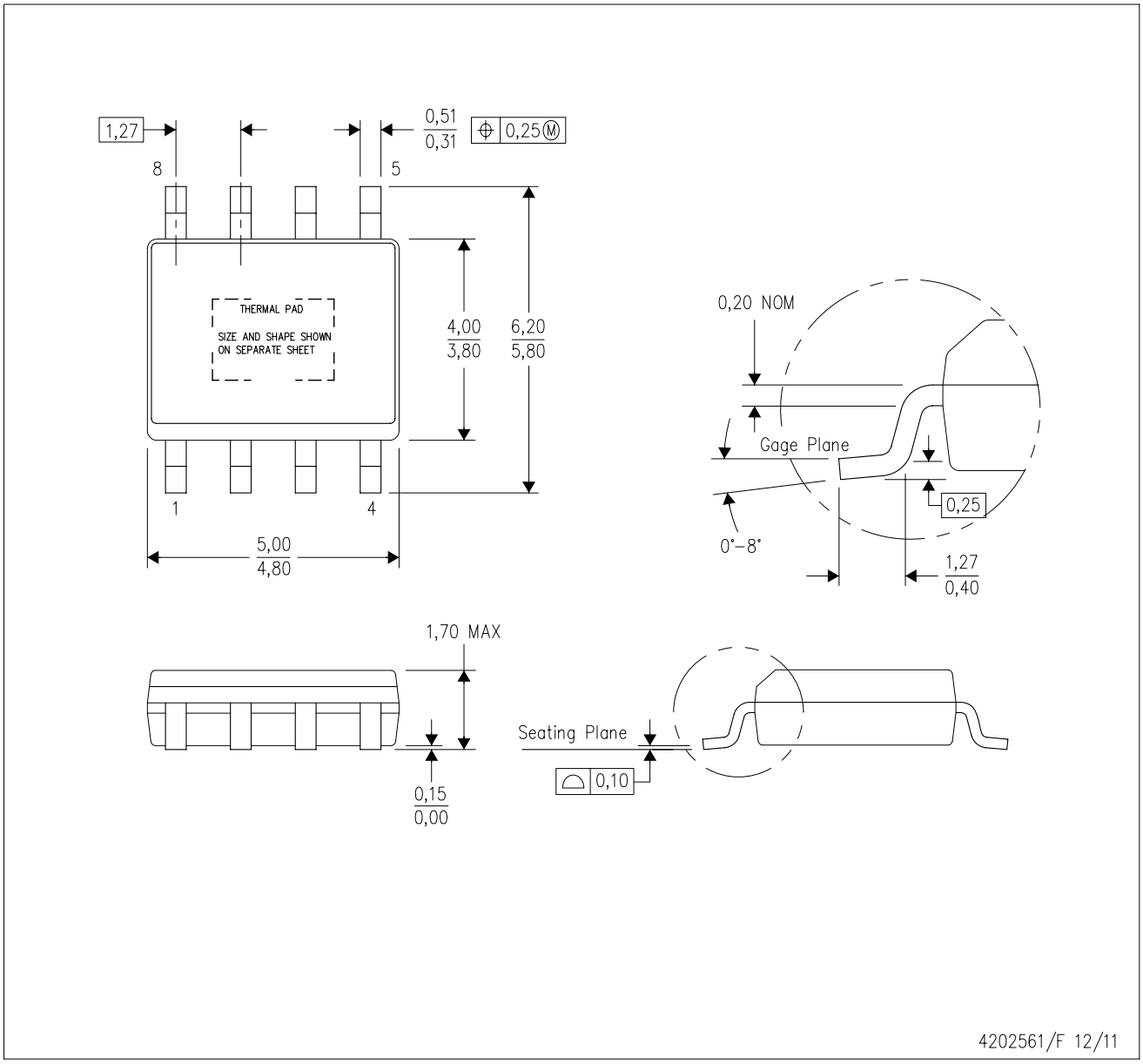

NOTES:
A. All linear dimensions are in millimeters. Dimensioning and tolerancing per ASME Y14.5–1994.
B. This drawing is subject to change without notice.
C. Body dimensions do not include mold flash or protrusion not to exceed 0,15.
D. This package is designed to be soldered to a thermal pad on the board. Refer to Technical Brief, PowerPad Thermally Enhanced Package, Texas Instruments Literature No. SLMA002 for information regarding recommended board layout. This document is available at www.ti.com <http://www.ti.com>.
E. See the additional figure in the Product Data Sheet for details regarding the exposed thermal pad features and dimensions.
F. This package complies to JEDEC MS-012 variation BA

PowerPAD is a trademark of Texas Instruments.

DDA (R-PDSO-G8) PowerPAD™ PLASTIC SMALL OUTLINE

THERMAL INFORMATION

This PowerPAD™ package incorporates an exposed thermal pad that is designed to be attached to a printed circuit board (PCB). The thermal pad must be soldered directly to the PCB. After soldering, the PCB can be used as a heatsink. In addition, through the use of thermal vias, the thermal pad can be attached directly to the appropriate copper plane shown in the electrical schematic for the device, or alternatively, can be attached to a special heatsink structure designed into the PCB. This design optimizes the heat transfer from the integrated circuit (IC).

For additional information on the PowerPAD package and how to take advantage of its heat dissipating abilities, refer to Technical Brief, PowerPAD Thermally Enhanced Package, Texas Instruments Literature No. SLMA002 and Application Brief, PowerPAD Made Easy, Texas Instruments Literature No. SLMA004. Both documents are available at www.ti.com.

The exposed thermal pad dimensions for this package are shown in the following illustration.

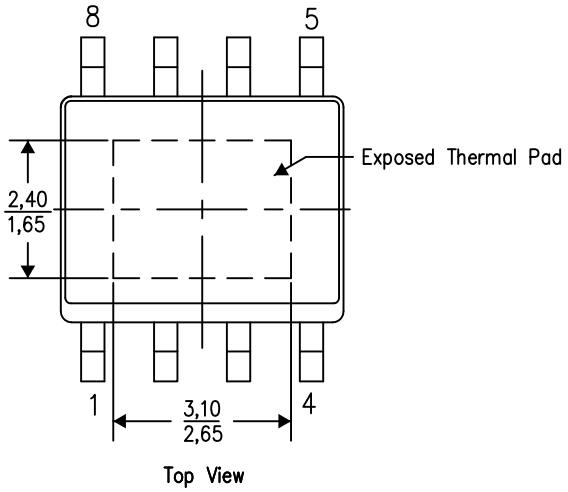

Exposed Thermal Pad Dimensions

4206322-6/L 05/12

NOTE: A. All linear dimensions are in millimeters

PowerPAD is a trademark of Texas Instruments

DDA (R–PDSO–G8) PowerPAD™ PLASTIC SMALL OUTLINE

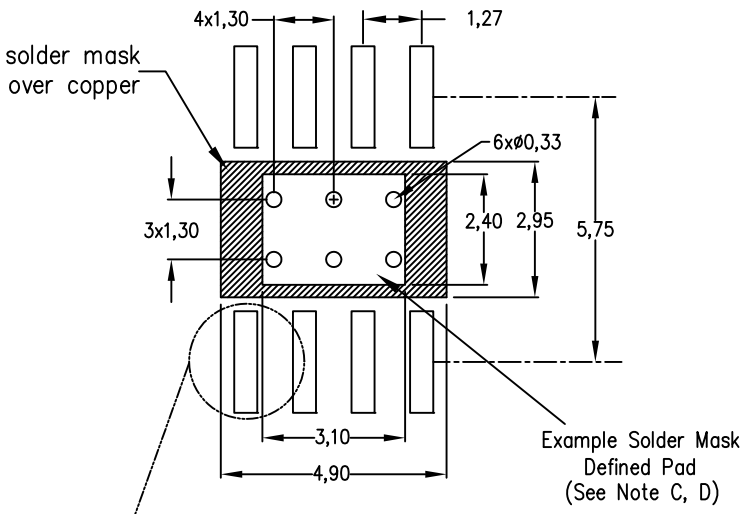

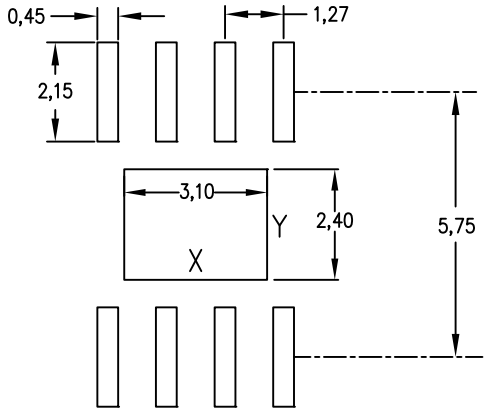

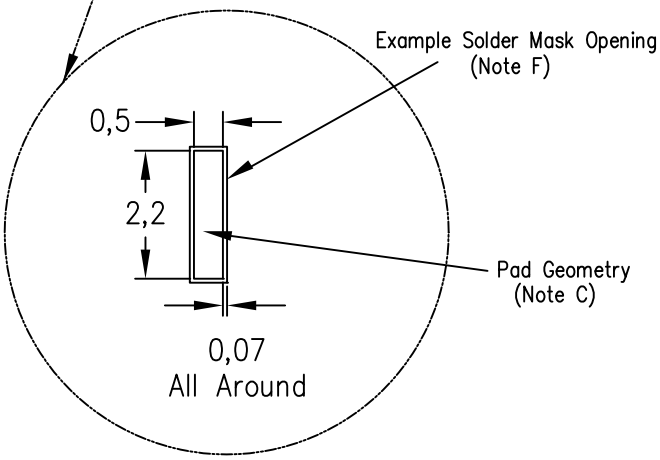

Center Power Pad Solder Stencil Opening		
Stencil Thickness	X	Y
0.1mm	3.3	2.6
0.127mm	3.1	2.4
0.152mm	2.9	2.2
0.178mm	2.8	2.1

4208951–6/D 04/12

NOTES:
A. All linear dimensions are in millimeters.
B. This drawing is subject to change without notice.
C. Publication IPC–7351 is recommended for alternate designs.
D. This package is designed to be soldered to a thermal pad on the board. Refer to Technical Brief, PowerPad Thermally Enhanced Package, Texas Instruments Literature No. SLMA002, SLMA004, and also the Product Data Sheets for specific thermal information, via requirements, and recommended board layout. These documents are available at www.ti.com <http://www.ti.com>. Publication IPC–7351 is recommended for alternate designs.
E. Laser cutting apertures with trapezoidal walls and also rounding corners will offer better paste release. Customers should contact their board assembly site for stencil design recommendations. Example stencil design based on a 50% volumetric metal load solder paste. Refer to IPC–7525 for other stencil recommendations.
F. Customers should contact their board fabrication site for solder mask tolerances between and around signal pads.

PowerPAD is a trademark of Texas Instruments.

IMPORTANT NOTICE

Texas Instruments Incorporated and its subsidiaries (TI) reserve the right to make corrections, enhancements, improvements and other changes to its semiconductor products and services per JESD46, latest issue, and to discontinue any product or service per JESD48, latest issue. Buyers should obtain the latest relevant information before placing orders and should verify that such information is current and complete. All semiconductor products (also referred to herein as “components”) are sold subject to TI’s terms and conditions of sale supplied at the time of order acknowledgment.

TI warrants performance of its components to the specifications applicable at the time of sale, in accordance with the warranty in TI’s terms and conditions of sale of semiconductor products. Testing and other quality control techniques are used to the extent TI deems necessary to support this warranty. Except where mandated by applicable law, testing of all parameters of each component is not necessarily performed.

TI assumes no liability for applications assistance or the design of Buyers’ products. Buyers are responsible for their products and applications using TI components. To minimize the risks associated with Buyers’ products and applications, Buyers should provide adequate design and operating safeguards.

TI does not warrant or represent that any license, either express or implied, is granted under any patent right, copyright, mask work right, or other intellectual property right relating to any combination, machine, or process in which TI components or services are used. Information published by TI regarding third-party products or services does not constitute a license to use such products or services or a warranty or endorsement thereof. Use of such information may require a license from a third party under the patents or other intellectual property of the third party, or a license from TI under the patents or other intellectual property of TI.

Reproduction of significant portions of TI information in TI data books or data sheets is permissible only if reproduction is without alteration and is accompanied by all associated warranties, conditions, limitations, and notices. TI is not responsible or liable for such altered documentation. Information of third parties may be subject to additional restrictions.

Resale of TI components or services with statements different from or beyond the parameters stated by TI for that component or service voids all express and any implied warranties for the associated TI component or service and is an unfair and deceptive business practice. TI is not responsible or liable for any such statements.

Buyer acknowledges and agrees that it is solely responsible for compliance with all legal, regulatory and safety-related requirements concerning its products, and any use of TI components in its applications, notwithstanding any applications-related information or support that may be provided by TI. Buyer represents and agrees that it has all the necessary expertise to create and implement safeguards which anticipate dangerous consequences of failures, monitor failures and their consequences, lessen the likelihood of failures that might cause harm and take appropriate remedial actions. Buyer will fully indemnify TI and its representatives against any damages arising out of the use of any TI components in safety-critical applications.

In some cases, TI components may be promoted specifically to facilitate safety-related applications. With such components, TI’s goal is to help enable customers to design and create their own end-product solutions that meet applicable functional safety standards and requirements. Nonetheless, such components are subject to these terms.

No TI components are authorized for use in FDA Class III (or similar life-critical medical equipment) unless authorized officers of the parties have executed a special agreement specifically governing such use.

Only those TI components which TI has specifically designated as military grade or “enhanced plastic” are designed and intended for use in military/aerospace applications or environments. Buyer acknowledges and agrees that any military or aerospace use of TI components which have ***not*** been so designated is solely at the Buyer's risk, and that Buyer is solely responsible for compliance with all legal and regulatory requirements in connection with such use.

TI has specifically designated certain components as meeting ISO/TS16949 requirements, mainly for automotive use. In any case of use of non-designated products, TI will not be responsible for any failure to meet ISO/TS16949.

Products		**Applications**	
Audio	www.ti.com/audio	Automotive and Transportation	www.ti.com/automotive
Amplifiers	amplifier.ti.com	Communications and Telecom	www.ti.com/communications
Data Converters	dataconverter.ti.com	Computers and Peripherals	www.ti.com/computers
DLP® Products	www.dlp.com	Consumer Electronics	www.ti.com/consumer-apps
DSP	dsp.ti.com	Energy and Lighting	www.ti.com/energy
Clocks and Timers	www.ti.com/clocks	Industrial	www.ti.com/industrial
Interface	interface.ti.com	Medical	www.ti.com/medical
Logic	logic.ti.com	Security	www.ti.com/security
Power Mgmt	power.ti.com	Space, Avionics and Defense	www.ti.com/space-avionics-defense
Microcontrollers	microcontroller.ti.com	Video and Imaging	www.ti.com/video
RFID	www.ti-rfid.com		
OMAP Applications Processors	www.ti.com/omap	**TI E2E Community**	e2e.ti.com
Wireless Connectivity	www.ti.com/wirelessconnectivity		

Mailing Address: Texas Instruments, Post Office Box 655303, Dallas, Texas 75265
Copyright © 2016, Texas Instruments Incorporated

Mouser Electronics

Authorized Distributor

Click to View Pricing, Inventory, Delivery & Lifecycle Information:

Texas Instruments:

DRV8870DDA DRV8870DDAR